

PRODUCT INFORMATION

Application Type	Inground Lights
Housing Type	Aluminum, stainless steel
Housing Colour	SS
Colour Temperature	2700K, 3000K
CRI	85
Dimmable	No
Controls	On/off
Driver	Inbuilt
Wattage Upto	4W
Size	Dia: 45mm, Depth: 85mm
IP Rating	IP67

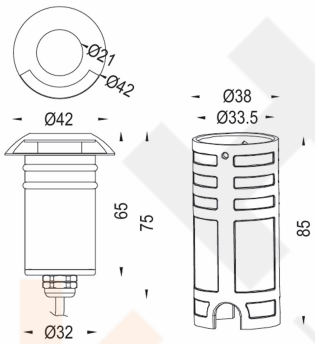



.