PRODUCT INFORMATION

Application Type	Profile Lights
Housing Type	Die Cast Aluminum

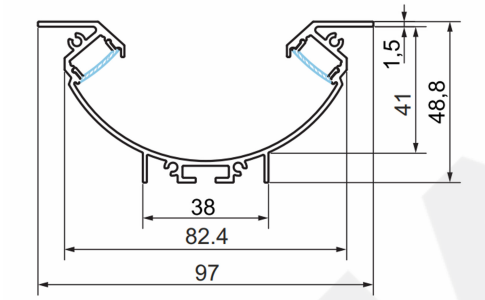

.